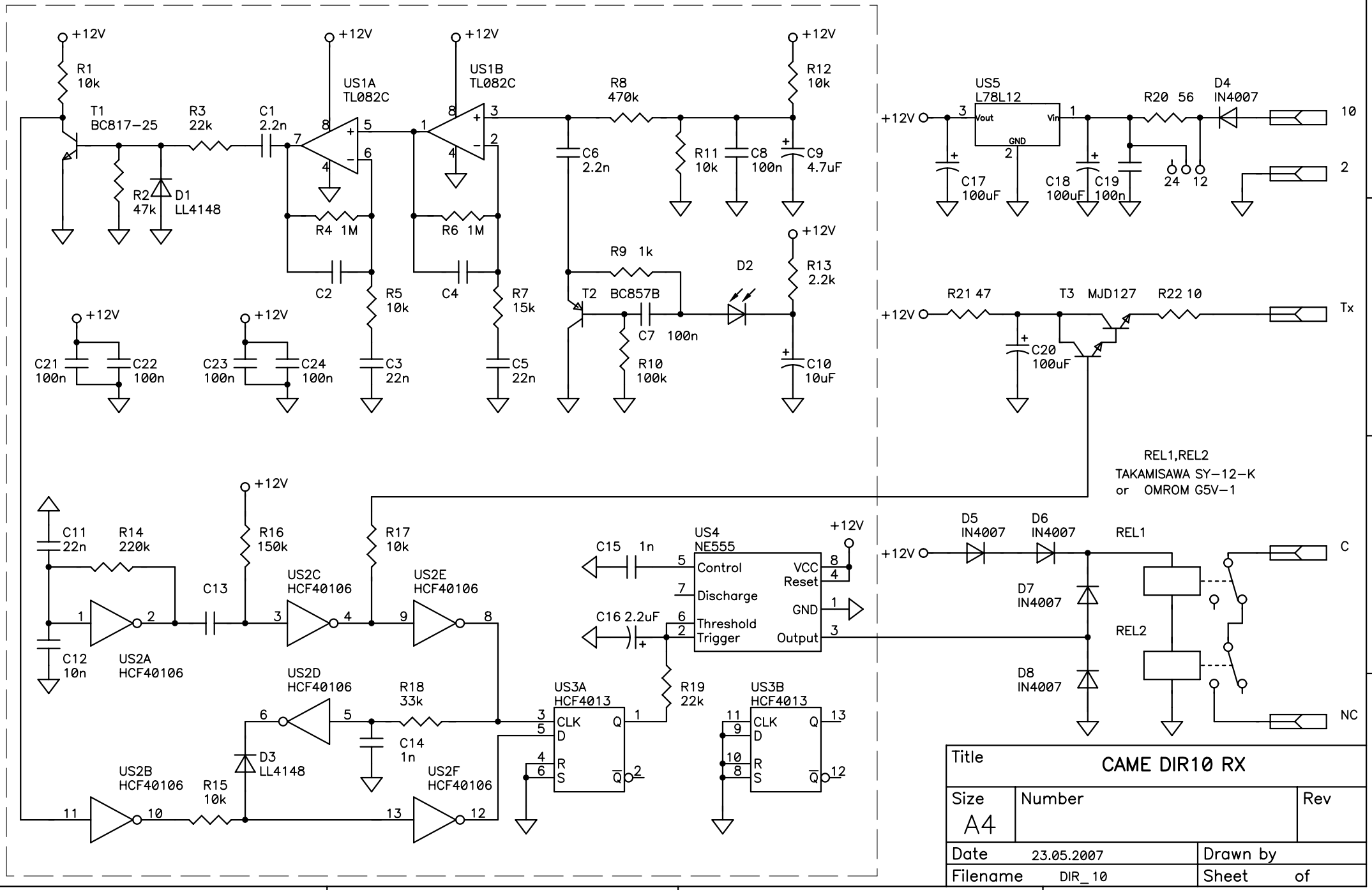
+12V
R1 10k
T1 BC817-25
R2 47k
D1 LL4148
R3 22k
C1 2.2n
US1A TL082C
R4 1M
C2
R5 10k
C3 22n
US1B TL082C
R6 1M
C4
R7 15k
C5 22n
C21 100n
C22 100n
C23 100n
C24 100n
R8 470k
C6 2.2n
R11 10k
C8 100n
R12 10k
C9 4.7uF
R9 1k
T2 BC857B
C7 100n
R10 100k
D2
R13 2.2k
C10 10uF
US5 L78L12
Vout
Vin
GND
C17 100uF
C18 100uF
C19 100n
R20 56
D4 IN4007
24
12
10
2
R21 47
T3 MJD127
R22 10
C20 100uF
Tx
REL1,REL2
TAKAMISAWA SY-12-K
or OMROM G5V-1
C11 22n
R14 220k
C12 10n
US2A HCF40106
C13
R16 150k
US2C HCF40106
R17 10k
US2E HCF40106
US2D HCF40106
R18 33k
C14 1n
D3 LL4148
US2B HCF40106
R15 10k
US2F HCF40106
C15 1n
C16 2.2uF
US4 NE555
Control
Discharge
Threshold
Trigger
VCC
Reset
GND
Output
R19 22k
US3A HCF4013
CLK
D
R
S
Q
US3B HCF4013
D5 IN4007
D6 IN4007
D7 IN4007
D8 IN4007
REL1
REL2
C
NC
Title
CAME DIR10 RX
Size
A4
Number
Rev
Date
23.05.2007
Drawn by
Filename
DIR_10
Sheet
of